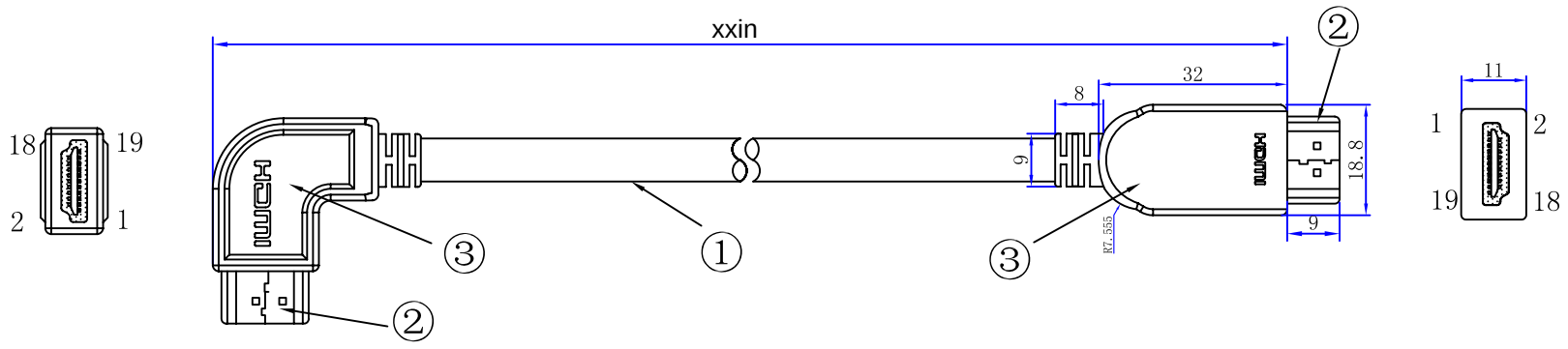

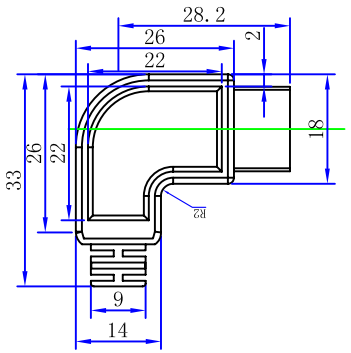

PIN ASSIGNMENT

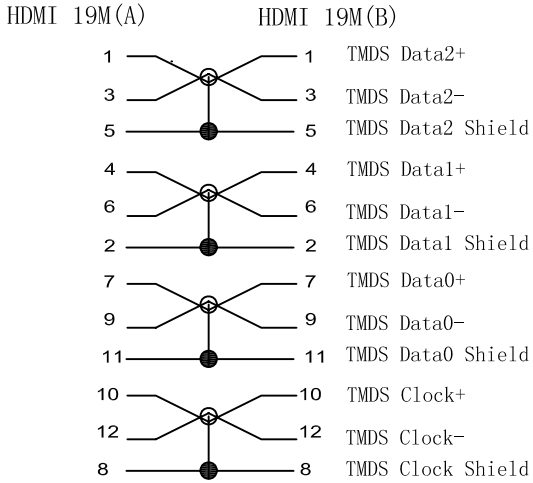

PIN ASSIGNMENT

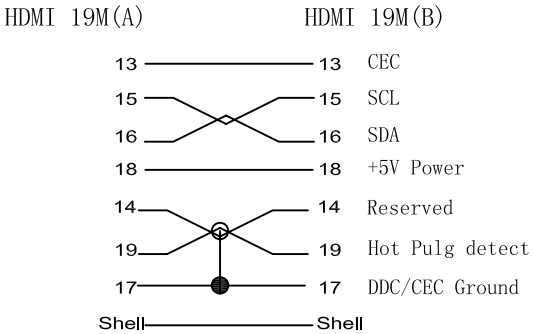

ROHS Compliant

NO	Descriptron	Q'TY	Unit
3	65P Black PVC		
2	HDMI AM,BLACK INSULATION,SHELL 3U" GOLD PLATED WITH SOLDER(P/N YQT-HAM3)		
1	(1P*30AWG+D+AL)*5C+4C*30AWG+AL+D+B OD7.3 L=xx inches - Black		

Tolerance, Unless Otherwise Specified	
UP TO 5	±0.2
ABOVE 5 --30	±0.3
ABOVE 30--50	±0.4
ABOVE 50	±0.5
ANGLE	±3°

USBFIREWIRE.com

THE INFORMATION CONTAINED HEREIN IS THE PROPRIETARY INFORMATION OF RR BUSINESS VENTURES, LLC. THE POSSESSOR AGREES TO MAINTAIN THIS DOCUMENT IN CONFIDENCE; NOT REPRODUCE IT OR COPY IT, AND NOT TO REVEAL OR PUBLISH IT IN WHOLE OR PART.
COPYRIGHT © 2019

DRAW:		TITLE	HDMI AM TO AM		
CHEDKED:		PART NO.			
APPROVED:		DRAW NO.			
DATE	2012-09-18	SCALE	1:1	UNIT	mm