USBFireWire.com

ANGLED - SHORT - CUSTOM - CABLES

P/N: RR-214300-10

Zinc Waterproof Ruggedized USB 2.0 Coupler –
Mini-B Female to Solder Pins – IP68

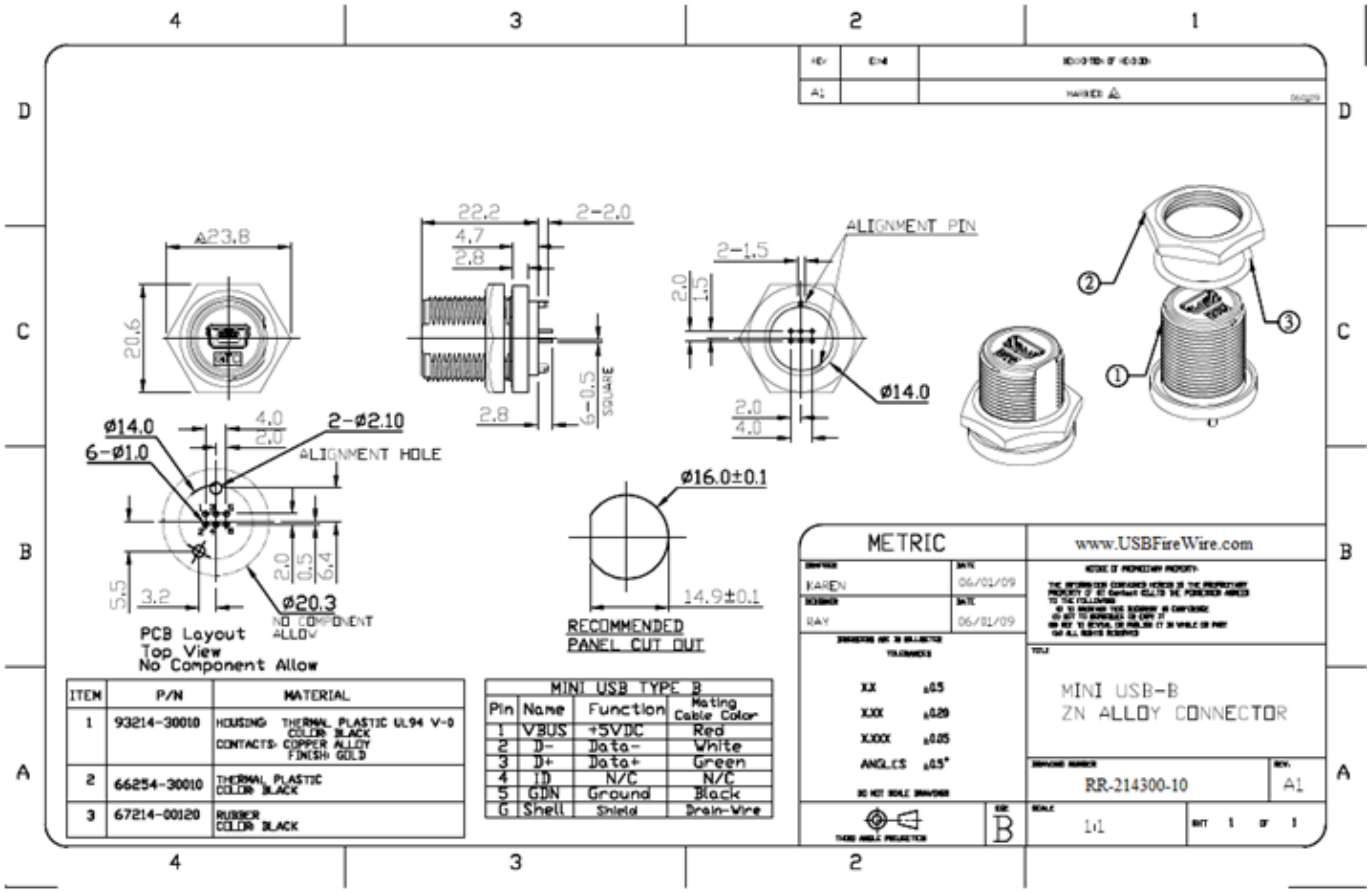

ITEM	P/N	MATERIAL
1	93214-30010	HOUSING: THERMAL PLASTIC UL94 V-0 COLOR BLACK CONTACTS: COPPER ALLOY FINISH GOLD
2	66254-30010	THERMAL PLASTIC COLOR BLACK
3	67214-00120	RUBBER COLOR BLACK

MINI USB TYPE B			
Pin	Name	Function	Mating Cable Color
1	VBUS	+5VDC	Red
2	D-	Data-	White
3	D+	Data+	Green
4	ID	N/C	N/C
5	GDN	Ground	Black
G	Shell	Shield	Drain-Wire

USBFireWire.com
ANGLED - SHORT - CUSTOM - CABLE

USBFireWire
1815 E Douglas
Wichita - KS - 67211

Phone:
(877) 522-3779

Fax:
(316) 239-2555

E-mail:
sales@usbfirewire.com