Notes: (Unless Otherwise Specified)

1. Waterproof Rate: IP68.
2. RoHS & REACH Compliant.

REV	ECN#	DESCRIPTION OF REVISION	DRAW BY DATE	CHECK BY DATE	APPROVE BY DATE
A0		Mass Production	Joyce 03/01/17	Ray 03/01/17	Ray 03/01/17

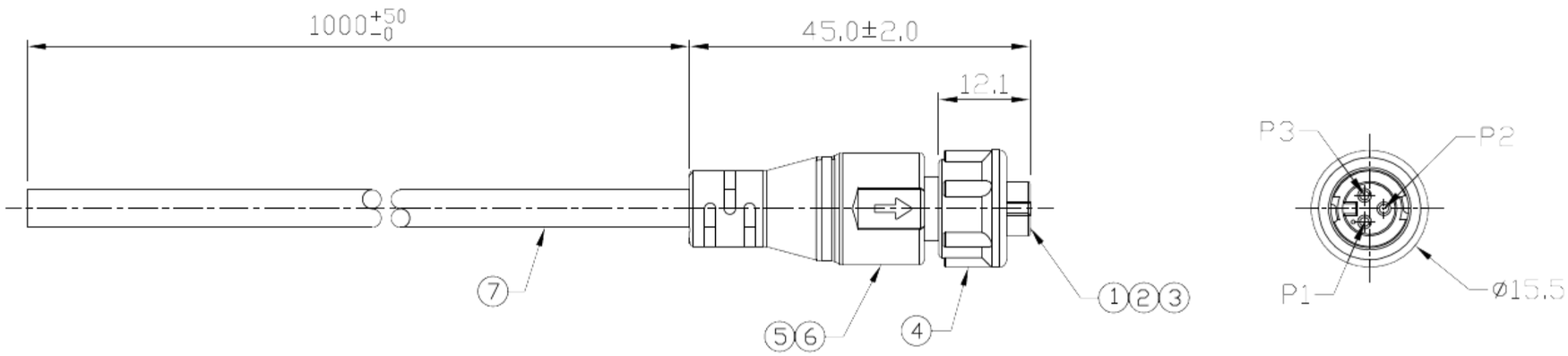

Item	Part Name	Material / Finish	Q'ty
7	Cable	UL2464 20AWG*3C+Al/My OD=5.0mm, Color: Black	1
6	Over Mold	PVC Color: Black	1
5	Inner Mold	Thermoplastic Color: White Or Black	1
4	Lock Nut	Thermoplastic Color: Black	1
3	O-Ring	Silicone Color: Red	1
2	Contacts	Copper Alloy Finish: Au Plated	3
1	Housing	Thermoplastic Color: Black	1

1	Yellow
2	White
3	Black

Wiring Diagram

DOC.CENTER.ISSUE
MAR.01.2017
ONLY FOR RELEASE

www.USBFireWire.com

NOTICE OF PROPRIETARY PROPERTY:

THE INFORMATION CONTAINED HEREIN IS THE PROPRIETARY PROPERTY OF ST Contact CO.LTD THE POSSESSOR AGREES TO THE FOLLOWING:
(I) TO MAINTAIN THIS DOCUMENT IN CONFIDENCE
(II) NOT TO REPRODUCE OR COPY IT
(III) NOT TO REVEAL OR PUBLISH IT IN WHOLE OR PART
(iv) ALL RIGHTS RESERVED

TITLE	DRAWING NUMBER	REV.
C1 5A 3P Cable End Female Lock With 39inches Cable	RR-151224-22035-39	A0

DO NOT SCALE DRAWINGS	B	1:1	Joyce 03/01/17	Lucas 03/01/17	Ray 03/01/17	X.X ± 0.5 X.XX ± 0.2	X.XXX ± 0.05 ANGLES ± 1°	mm	1/1
THIRD ANGLE PROJECTION	SIZE	SCALE	DRAW / DATE	CHECK / DATE	APPROVE / DATE	TOLERANCES		UNIT	SHEET