CHANGE VERSION		REMARKS						
			C	08/12/04	SELF REMARK	F	18/01/29	REMOVE STICKER, CHANGE TOOLING, CABLE, SCREW, PACKAGE
A	07/09/20	REL	D	08/12/11	SELF REMARK	G	21/07/21	SELF REMARK
B	08/01/19	SELF REMARK	E	11/10/06	CHANGE CABLE	H	23/02/13	ADD P/N

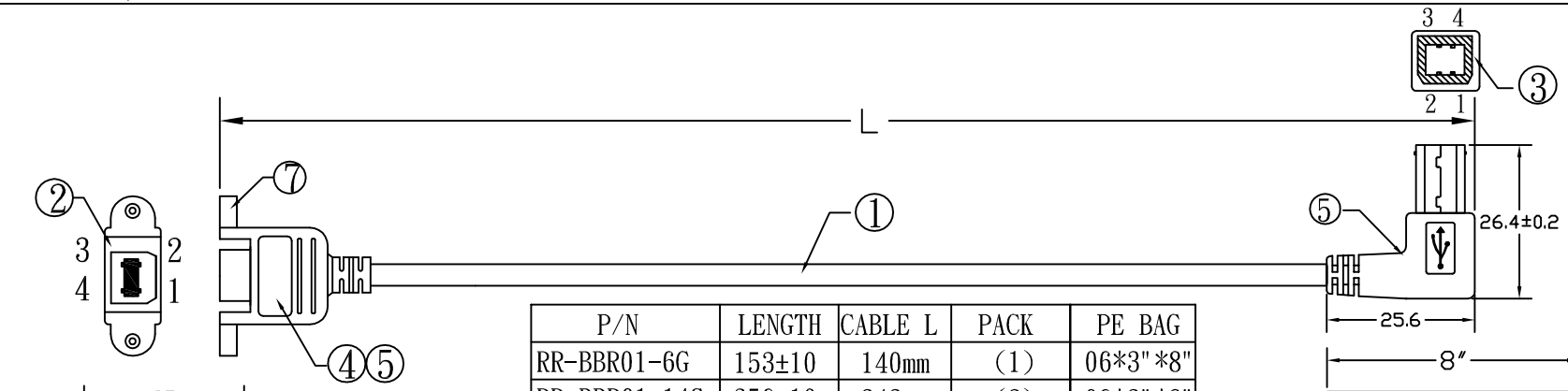

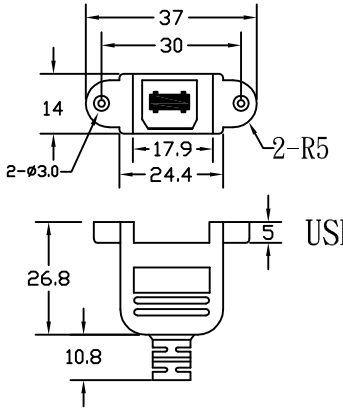

P/N	LENGTH	CABLE L	PACK	PE BAG
RR-BBR01-6G	153±10	140mm	(1)	06*3"*8"
RR-BBR01-14G	356±10	343mm	(2)	06*3"*8"
RR-BBR01-20G	510±20	497mm	(3)	06*4"*6"
RR-BBR01-32G	815±20	802mm	(3)	06*4"*6"
RR-BBR01-59G	1500±30	1485mm	(3)	06*6"*8"

PIN OUT :

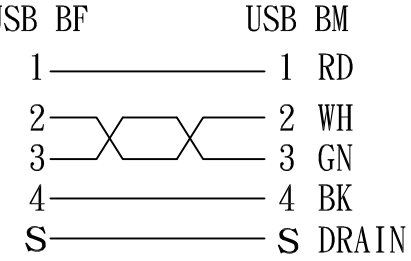

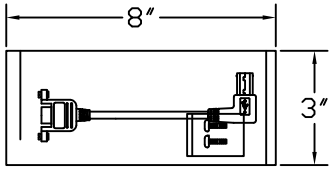

PACK(1)

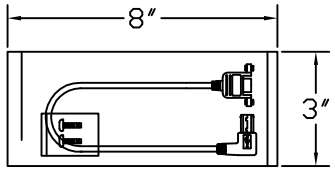

PACK(2)

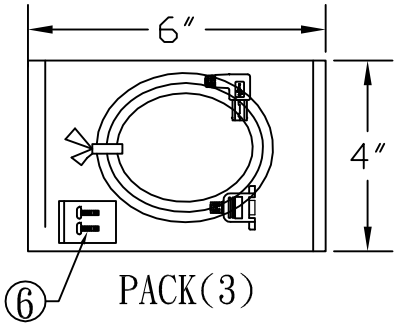

PACK(3)

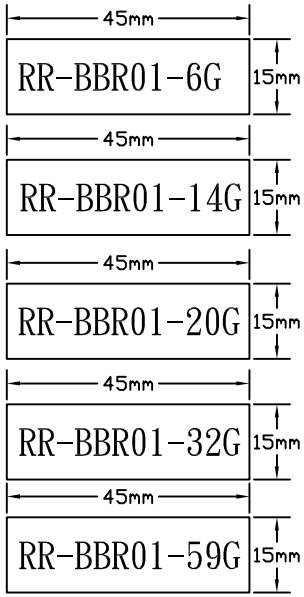

P/N STICKER

RoHS

MATERIAL LIST :

NO.	P/NAME	DESCRIPTION	Q'TY
1	WIRE	UL2725 28AWG(7/0.12 TC)*1P+24AWG(7/0.20 TC)*2C+AL+1(TC)+ B(16*4/0.10 TC) OD:5.0±0.15 BLACK(B792) 2.0 (COPARTNER)	1
2	PLUG	USB"B" TYPE FEMALE GOLD PLATED	1
3	PLUG	USB"B" TYPE MALE GOLD PLATED SHORT TYPE	1
4	PVC	LD PE	3g
5	PVC	45P BLACK(B792)PVC	15g
6	SCREW	#4-40 5.3*10mm + TYPE	2
7	NUT	#4-40 NUT	2
8	PACK	1PCE/PE BAG:06*A"*B"+ P/N STICKER (2PCS #4-40 5.3*10MM + TYPE SCREW IN 06*2.5*5CM BAG	1

MOLD TOOL NO.

USB BF
A110-709-001
B120-248-001

"B" TYPE
A110-393-001

USBFIREWIRE.com

THE INFORMATION CONTAINED HEREIN IS THE PROPRIETARY INFORMATION OF RR BUSINESS VENTURES, LLC. THE POSSESSOR AGREES TO MAINTAIN THIS DOCUMENT IN CONFIDENCE; NOT REPRODUCE IT OR COPY IT, AND NOT TO REVEAL OR PUBLISH IT IN WHOLE OR PART.
COPYRIGHT © 2019

SCALE	UNIT	REV
	MM	H

FILE NAME: OW0708024

CUSTOMER

DATE: 23/02/13

CUSTOMER P/N

DRAWN BY: Marcos

CHECKED BY

CONFIRMED BY

CHECKED BY

APPROVED BY