CHANGE VERSION		REMARKS			
A	13/03/25	REL	C		
B			D		
			E		

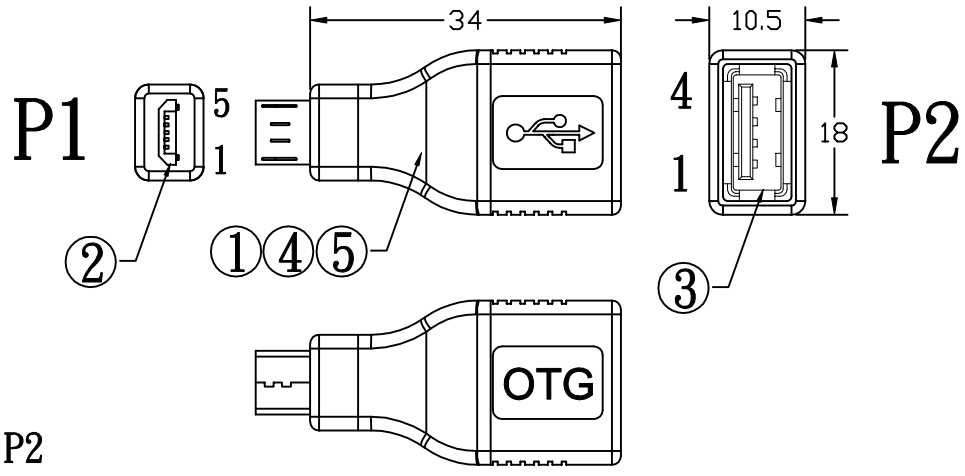

PIN OUT :

P1	P2
1	1
2	2
3	3
4+5	4
S	S

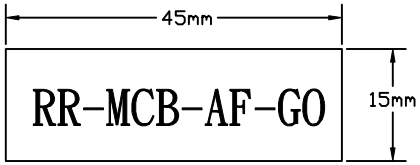

P/N STICKER

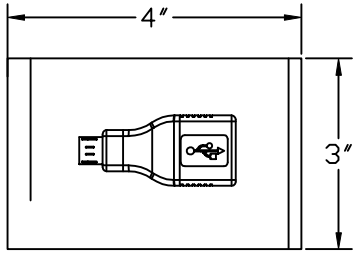

RoHS

MATERIAL LIST :

NO.	P/NAME	DESCRIPTION	Q' TY
1	WIRE	UL1061 28AWG WIRE L:30mm	5
2	PLUG	MICRO USB"B"TYPE 5P MALE GOLD PLATED SHORT TYPE	1
3	PLUG	USB"A"TYPE FEMALE GOLD PLATED + TINPLATE	1
4	PVC	LD PE	1.5g
5	PVC	45P GREEN(PANTONE 3435C)PVC	12g
6	PACKAGE	1PCE/PE BAG:06*3"*4" + P/N STICKER	1

MOLD TOOL NO.

USBFIREWIRE.com

THE INFORMATION CONTAINED HEREIN IS THE PROPRIETARY INFORMATION OF RR BUSINESS VENTURES, LLC. THE POSSESSOR AGREES TO MAINTAIN THIS DOCUMENT IN CONFIDENCE; NOT REPRODUCE IT OR COPY IT, AND NOT TO REVEAL OR PUBLISH IT IN WHOLE OR PART.
COPYRIGHT © 2019

SCALE	UNIT	REV
	MM	A

FILE NAME: OW1303025

CUSTOMER:

DATE: 13/03/25

CUSTOMER P/N: RR-MCB-AF-GO

DRAWN BY: Marcos

CHECKED BY:

CONFIRMED BY:

CHECKED BY:

APPROVED BY: